Design
&Build

BON LAB
LABORATORY FURNITURE +

LABORATORY FURNITURE +

A SINGLE POINT OF RESPONSIBILITY FOR DESIGN
AND CONSTRUCTION OF LABORATORIES

CERTIFIED ISO 9001:2015 COMPANY
CERTIFIED ISO 14001:2015 COMPANY
OUR PLANET OUR RESPONSIBILITY

UNITED ACCREDITATION FOUNDATION
UAF

www.bonlabin.com

THE PERFECT BUILDING IS NOT ENOUGH TO DELIVER GOOD SCIENCE

Scientific research laboratories have a more limited life span than other buildings because the specific demands change enormously with time.

A laboratory designing is the process of taking both basic program elements and highly technical blocks and arranging them to create a space that is both safe and efficient. Great lab design solves the riddle of how to incorporate more science into less space while creating architectural and engineering balance.

Proper lab layout also ensures the ergonomics of the workspace don't impede workflow. Lab must be designed in a way that provides everyone ample space to work and allows researchers to carry out their work efficiently and in the correct order.

TABLE OF CONTENTS

04 ABOUT US
06 WORKTOPS
08 FURNITURE SYSTEMS
10 STORAGE CABINETS
12 LABORATORY FITTINGS
14 LAB SAFETY SYSTEMS
15 LAB CHAIRS
16 OTHER ACCESSORIES
18 FUMEHOOD & EXTRACTION SYSTEMS
22 EDUCATIONAL LAB FURNITURE
24 RETRACTABLE STUDENT LAB TABLE
26 STAINLESS STEEL FURNITURE
28 PHOTO GALLERY - INDUSTRIAL
36 PHOTO GALLERY - MEDICAL
38 PHOTO GALLERY - EDUCATIONAL
42 OUR SERVICES
43 OUR PARTNERS
44 CONTACT US

follow us on social media for updates

ABOUT US

BONlab the brand since 2006 is eminent in the field of designing and furnishing of laboratories. BONlab is growing fast today, because that intuitively understands their customers and make brave, iconic moves that delight and deliver in new ways.

MISSION

TO OFFER DESIGNER LAB FURNITURE ON WORTH VALUE WITH EXCEPTIONAL SERVICES AND USE THE BUSINESS TO INSPIRE & IMPLEMENT SOLUTIONS TO THE ENVIRONMENTAL CRISIS.

VISION

OUR VISION IS TO BE A LEADER IN DEVELOPING LABORATORY FURNISHINGS WITH HOLISTIC APPROACH, CIRCULAR ECONOMY AND ECOFRIENDLY METHODS.

BONLAB
LABORATORY FURNITURE +

BON FURNITURE INDUSTRIES LLC
P. O. Box 66902, Emirates Industrial City, SHARJAH, UNITED ARAB EMIRATES,
Tel: +971 6 5569188, info@bonlabin.com, sales@bonlabin.com

DISCOVER THE DESIGN AND FURNISHING HAPPENING WITH BONLAB.

At BONlab, we provide the best high quality furniture's with technological advancement. We construct and provide services for a variety of laboratory furniture's and equipment's including complex technical furniture's, Fume filtering systems, stainless steel furniture, laboratory gas distribution systems, etc. Our products can be constructed in different configurations to perfectly fit your space and storage requirements, nature of the laboratory, flexibility and most importantly, budget.

BONLAB
LABORATORY FURNITURE +

www.bonlabin.com

LABORATORY WORKTOPS

Choosing the appropriate work surface for laboratory is a hard decision since there is lot of factors to be considered.

Lab countertops and work surfaces are typically the most harmed area of the laboratory. Opting a suitable material would be preferred depending upon the type of experiments performed or according to the work conducted daily.

The most important factors to be considered are:
Chemical resistance, Abrasive resistance, Heat resistance, Impact resistance, Moisture resistance, Anti Bacterial properties, Type of use, Aesthetics and Cost.

Download PDF page for WORKTOPS

EPOXY

Epoxy Resin is the modern laboratory benchtop material that offers a perfect combination of features and benefits. It is durable, extremely chemical and stain resistant, mechanically strong, easily cleaned and decontaminated and exhibits good fire resistance and fire propagation properties.
Custom made worktops available from 19mm to 25mm thick epoxy sheets

TRESPA

T03.4..0
Silver Grey

T70.0.0
Slate Grey

TRESPA -toplab

Trespa is a flat one piece panel based on thermosetting resins, homogeneously reinforced with cellulose fibres and manufactured under high pressure and temperature. It is ideal for laboratory environments

ACRYLIC - solidsurface

Solid surface is an ideal material for commercial and residential application such as kitchen, reception, etc. The fabrication advantages are flexible, can be cut, shaped, moulded, and formed in to 3Dshapes.
Solid surface worktops are made of 12mm thick solid surface sheets backed with 18 to 36mm plywood with integrated backsplash and downturn

LABORATORY BENCH worktops

STAINLESS STEEL

Stainless steel is extremely durable, stain resistant, will not chip or fade, easy to clean, and 100% recyclable. We usually use 304 or 316 grade Stainless steel for specific applications. Integral fixing of SS sinks and backsplash is standard with our tops.

POLY POLYPROPYLENE

Polypropylene worktop has good level of chemical resistance recommended for moisture and wet areas.
Custom made worktops available from 3mm thick to 15mm thick Polypropylene sheets backed with 18mm to 36mm plywood worktops and hot melt glued PVC edging.

GRANITE

Granite worktop made of granite of minimum 19mm thickness .The exposed edges shall be round molded. All worktops shall be with 100mm backsplash on walls of same thickness.

LAMINATED PLYWOOD

Laminated Plywood is mainly using for office and dry work areas, computer lab. Plywood worktop made of 24 mm BWP (Boiled Water Proof) plywood laminated with 0.9 mm thick High Pressure Laminate on both sides. The lamination is done with hot press with minimum of 90 tones pressure. All worktops shall have 3mm thick hot melt glued PVC edging and 100mm glued back splash for wall benches.

FURNITURE FABRICATION SYSTEMS

When it comes to laboratory furniture system designs, it is safety that is considered first. After accomplishing the safety policies properly the system is focused on aesthetics, modularity and flexibility of the design. The appealing furniture designs are created to promote long-term productivity by making the environment inviting and favorable to working efficiency.

BONlab gives you a variety of options to configure your future laboratory. Apart from our standard system series, we can customize the furniture as per end user requirements.

Download PDF page for Furniture SYSTEMS

STREAM - 1

The STREAM-1 series furniture range is a fixed system. Solid worktops are fixed on pedestal units. This system does not required any framework and suits permanent benching particularly with services.

This system is suitable for laboratories that face few and minor changes during their lifetime. Under bench cabinets can be used to support worktops, without need to use C' or H-type frames

STREAM - 2

The STREAM- 2 series is designed with hygiene in mind, Worktops are supported on Metal H' Frame (made of 30 / 40 mm square tubes) which provides easy cleaning for floors. An ideal solution for hospitals or infection-control labs.

Al frames are welded to withstand high bearing loads, and also frames are epoxy powder coated for protection against chemical spills and corrosion.

BONLAB STREAM- 2 series system can be reinforced or adapted for heavier load bearing purposes

FURNITURE FABRICATION SYSTEMS

STREAM - 3

The STREAM-3 series are similar to STREAM-2 while the metal frames are C' type Cantilevered and suspended under bench cabinets are hanging on the frame.

BONLAB STREAM- 3 series is the ideal solution for hospitals or infection control laboratories where it is essential that dirt, dust and other contaminates do not collect around and underneath laboratory furniture.

STREAM - 4

The STREAM-4 under bench furniture series is a robust furniture system on braked castors that can easily be moved around your laboratory. This series will be a combination of STREAM 1, 2 and 3.

Front castors of each mobile units are with brake. The frame works of furniture benches have fine-adjust leveling footing. BONlab STREAM-4 series will provide quality and style to any space.

STREAM - 5

The STREAM-5 Series furniture range is an advanced form of cantilever frame systems in which the frame is firmly fixed to the floor or wall and the bottom part of bench is completely free for leg room which comforts to accommodate more users

BONLAB STREAM- 5 series are most suitable where more persons are working on the same bench, like in the universities or educational institutions.

STORAGE CABINETS

TALL STORAGE CABINETS
Tall units are typically standalone pedestal type units. These are placed against wall, separate from benching. Tall storage cabinets provide a large storage volume

WALL MOUNTED CABINETS
Wall mounted cabinets are available with, full panel doors, solid framed glass and all glass doors

Gratnells

GRATNELL TRAY TROLLYS
For over 40 years Gratnells has been one of the leading suppliers of storage trolleys and frames to hospitals. Their comprehensive range of products is ideal for all your medical storage needs from storage frames and trolleys right through to trays and trolley accessories.

STORAGE CABINETS

LABOR SECURITY SYSTEM
SAFETYFIRST

URL
www.laborsecurity.com

The Safetybox® for chemicals, acids and bases are made of acid-proof materials, have a monolithic external structure and inside are already equipped with shelves and bottom basin, to collect any spills. The doors open up to 180° in order to easily remove the tray-shaped shelves. The hinges are concealed and resistant to corrosive products.

LABORATORY GRADE FITTINGS

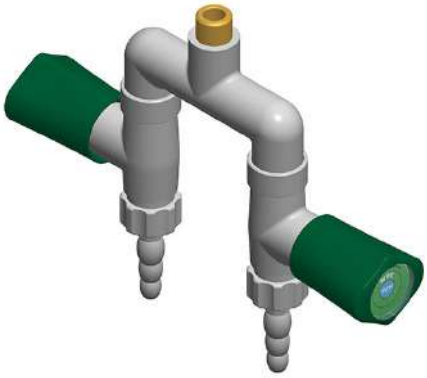

LABORATORY GRADE FITTINGS

www.bonlabin.com

LABORATORY FITTINGS

Valves / controls are essential accessories in laboratories. We deal with wide range of Laboratory fittings such as Water faucets, Gas valves etc.

POLY PROPYELENE FITTINGS

LABORATORY GRADE FITTINGS

ELECTRICAL STANDOUT

ELECTRICAL PEDESTAL BOX

ATEX RATED POWER SOCKETS

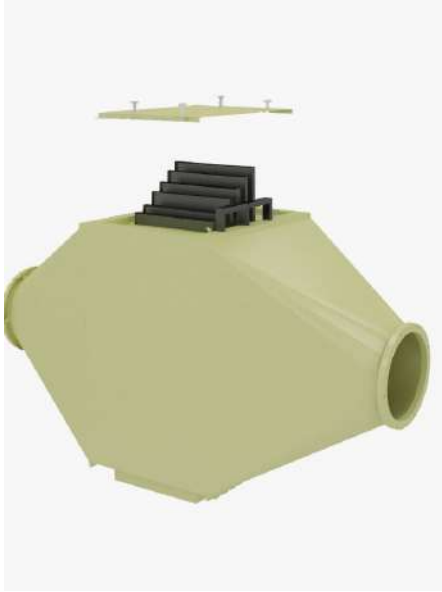

ACTIVATED CARBON FILTER BOX

P P EXTRACTION BLOWER

WET SCRUBBER

LABORATORY SAFETY FITTINGS

LABORATORY SAFETY FITTINGS
Many laboratories contain significant risks, and the prevention of laboratory accidents requires great care and constant vigilance.

safety equipment's are designed to wash away chemicals that have come into contact with the skin or clothing as the result of a chemical splash or spill

LABORATORY CHAIRS

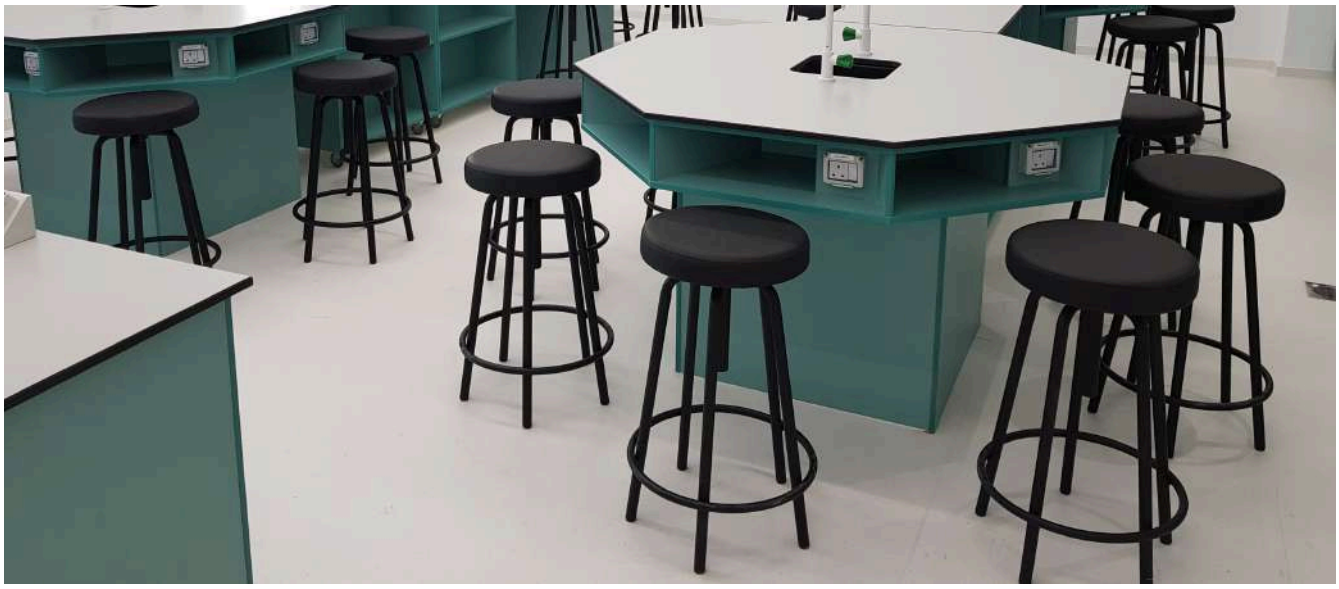

height adjustable
LABORATORY CHAIRS

OTHER ACCESSORIES

REAGENT RACKS

BONlab offers a wide range of Reagent racks suitable for the modern time laboratories.

Reagent shelving rack made of sturdy alloy aluminum extrusion framework. The shelve / platform can be equipped with toughened glass or TRESPA TOPlab panel for stain and corrosion resistance reagent storage. The rack height is adjustable as per requirements

OTHER ACCESSORIES

Find details here

https://bonlabin.com/labfurniture/

MONITOR ARM

CPU HOLDER

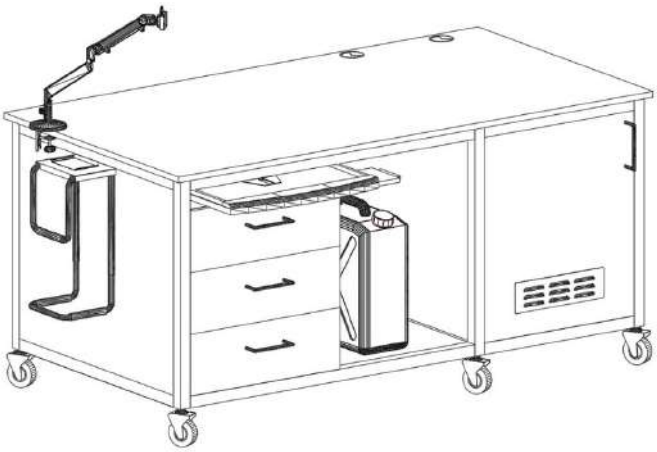

MASS SPECTROMETRY WORKSTATION

LAB TROLLY

DRIP RACK / PEGBOARD

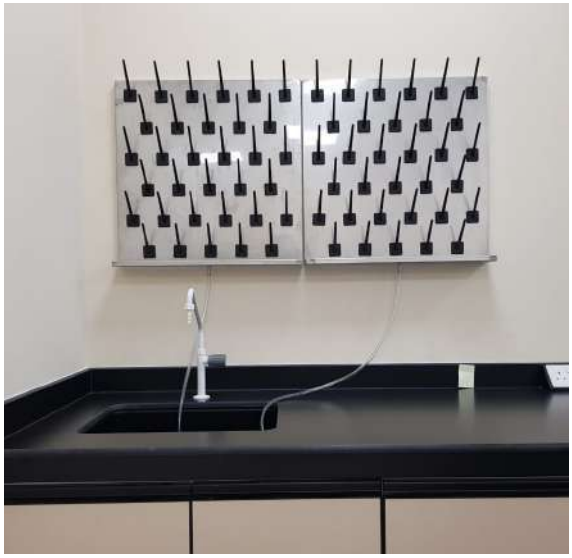

FUME HOOD AND EXTRACTION SYSTEMS

EXPULSER
FUME HOOD

For more information Download PDF page for FUMEHOOD

A Laboratory fume hood (Fume cupboard) is a type of local exhaust ventilation system inside the laboratory. It is a typical enclosed cabinet except front face. The front opening will be equipped with a moving sash made out of toughened / safety glass. Air is drawn in to the hood under, through the opened sash and is exhausted through openings in the rear & top of the cabinet to a remote point such as an exhaust stack on the roof of the building.

A laboratory fume hood is equipped with a baffle designed to control air flow patterns within the enclosure and manage an even distribution of air at the opening. When connected to properly designed exhaust system, the fume hood will carry the undesirable effluents -generated within the enclosure during a laboratory procedure-away from laboratory personnel. When used properly, they can provide an effective backup safety device for the containment and exhaust of toxic, offensive or flammable materials.

DESIGNING
We create design, based on your need.

MANUFACTURING
Manufacturing, complying to International standards

INSTALLATION
Responsible installations & after sales services

FUME HOOD AND EXTRACTION SYSTEMS

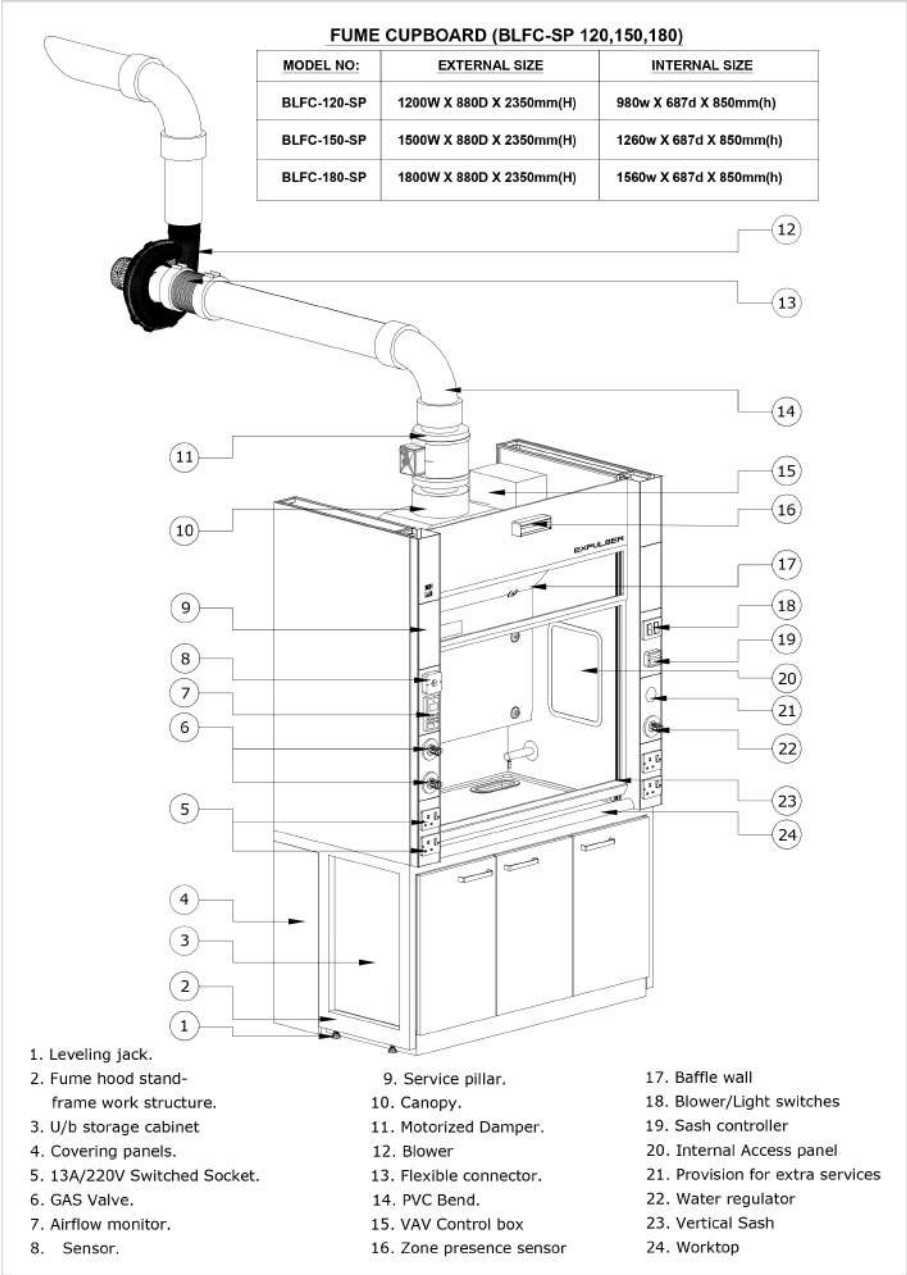

CERTIFIED TO

At **BONLAB** we ensure the highest standards of laboratory safety and performance. Our fume hoods and ventilation systems are rigorously tested and certified to meet **ASHRAE 110-2016**, **SEFA 1-2010**, and **EN 14175** the most stringent industry benchmarks for containment, airflow, and user protection.

TYPES of FUME HOODS

BENCH MOUNTED FUME CUPBOARD
Majority fume hood types are bench mounted.
Mainly, there are two parts for Fume Hood.
a) Fume Hood Upper Unit, b) Fume hood Base cum storage
(In case of Walk-in type Fume Hood, there is Upper Unit only)

CERTIFIED TO

ASHRAE
EUROPEAN NORM EN
SEFA

WALK-IN TYPE FUME CUPBOARD
Walk-in fume hood are basically a bench hood that reach the floor, do allow users to walk in and out to set up equipment before and after work begins.
Walking fume hood is also known as a Floor Mounted Fume hood.

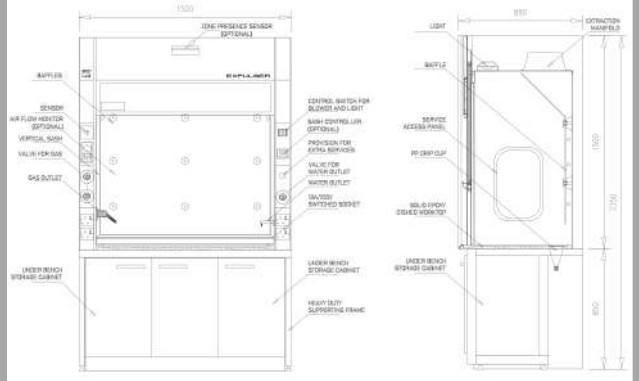

- Structure made of 1mm thick cold rolled steel with epoxy powder coating
- Baffle and internal linings are 6mm thick Phenolic resin panel
- Worktop 19mm thick epoxy or 16mm thick Phenolic resin TRESPA
- Sash made of 6mm thick toughened glass vertically sliding and 4mm thick toughened sliding glass window horizontally as optional.
- A cold water outlet and a GAS outlet with front fascia mounted valves.
- A cup sink made of polypropylene.
- 2no. 13A / 220V Electrical switched single socket mounted on front fascia
- 2no. 20W daylight lamp with glass insulation lamp box
- An under bench storage cabinet with two door and polypropylene internal lining for chemical storage. This can be vented to exhaust optionally.

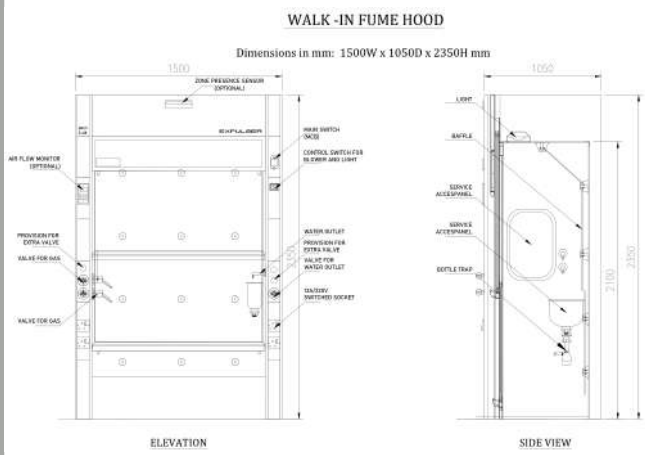

Walk-in fume cupboard is appropriate for placing large floor standing equipments.

The standard sash arrangement for walkin fume hood will be double sash opening. However, this can be customized for special applications

A properly operating and correctly used fume hood can reduce or eliminate exposure to volatile liquids, dusts, and mists. It is advisable to use a laboratory hood when working with all hazardous substances.

FUME EXTRACTORS / SUCTION ARMS

FUMEX - ME

The ideal extractor for laboratory environments
The unique joint design of the Fumex ME results in a very low pressure drop, which produces many valuable benefits:

MEX AA

Telescopic local extractor for atom absorption apparatus
MEX AA is specially developed for the extraction of airborne pollutants at high temperatures generated from atom absorption apparatus.

FUMEX - MF

MF Mobile filter for welding smoke and fine dust in temporary workplaces A flexible filter for use in temporary welding operationsHigh cleaning efficiencyPowerful extraction capacity

MiniTEX

MiniTEXFor workplaces requiring the market's lowest pressure dropSuitable in environments where the extractor can be incorporated in the same extraction system as other products with a low pressure drop such as fume cabinets or existing ventilation systems

EDUCATIONAL LAB FURNITURE

ERUDIT Academia Furniture

erudit is the brand under 'Bon Furniture Industries LLC' for their Educational furniture systems.

A group of professionals to design and supply bespoke furniture for educational institutions

According to education experts, the traditional classroom is more likely to be part of an ancient history syllabus. In this vision of the future, technology will rule classrooms, with 3D printers, virtual reality headsets and interactive desks among the main features.

BONlab team can help you design a safe and efficient lab using all the proper lab furniture, advising on ventilation and placement of furniture and safety equipment for easy accessibility.

For more information Download PDF page for School lab furniture

"Education is not the learning of facts, but the training of the mind to think"

Albert Einstein

Our design teams will work with you to configure room layouts to meet with your expectations whilst taking into consideration government regulations and school guidelines to ensure a functional working environment. Each laboratory and preparation area are designed to facilitate individual teaching styles.

EDUCATIONAL LAB FURNITURE

A well-planned science laboratory creates a working environment that not only benefits students but their teachers too.

Work benches, tables, chairs and stools, as well as lab-specific hardware (including taps and sinks), are specified for the intended use of the laboratory. These take into consideration the intelligent use of space and a suitable working height, depending on the age of students.

EDUCATIONAL LAB FURNITURE

RETRACTABLE STUDENT BENCH FOR SCIENCE LABORATORIES

BONlab offers a full line of completely free-standing, flexible laboratory furniture that allows you to restructure and reorganize your space at any time.

With today's generation of laboratories requiring an adaptable workplace, our integrated systems are able to organize a space in modern labs while minimizing the use of room space.

This bench system is pre-wired and pre-plumbed, offering ease of installation and capable of multiple circuits.

For more information Download PDF page for Retractable table

EDUCATIONAL LAB FURNITURE

The multipurpose Retractable student table from BONlab is an ideal solution for academic laboratory settings. The flexible and changeable Lab benches can be converted to a class room very easily. This System was engineered to empower labs for continuous change.

Movable Student tables are not attached to the floor and can easily be reconfigured without disruptive and costly remodeling.

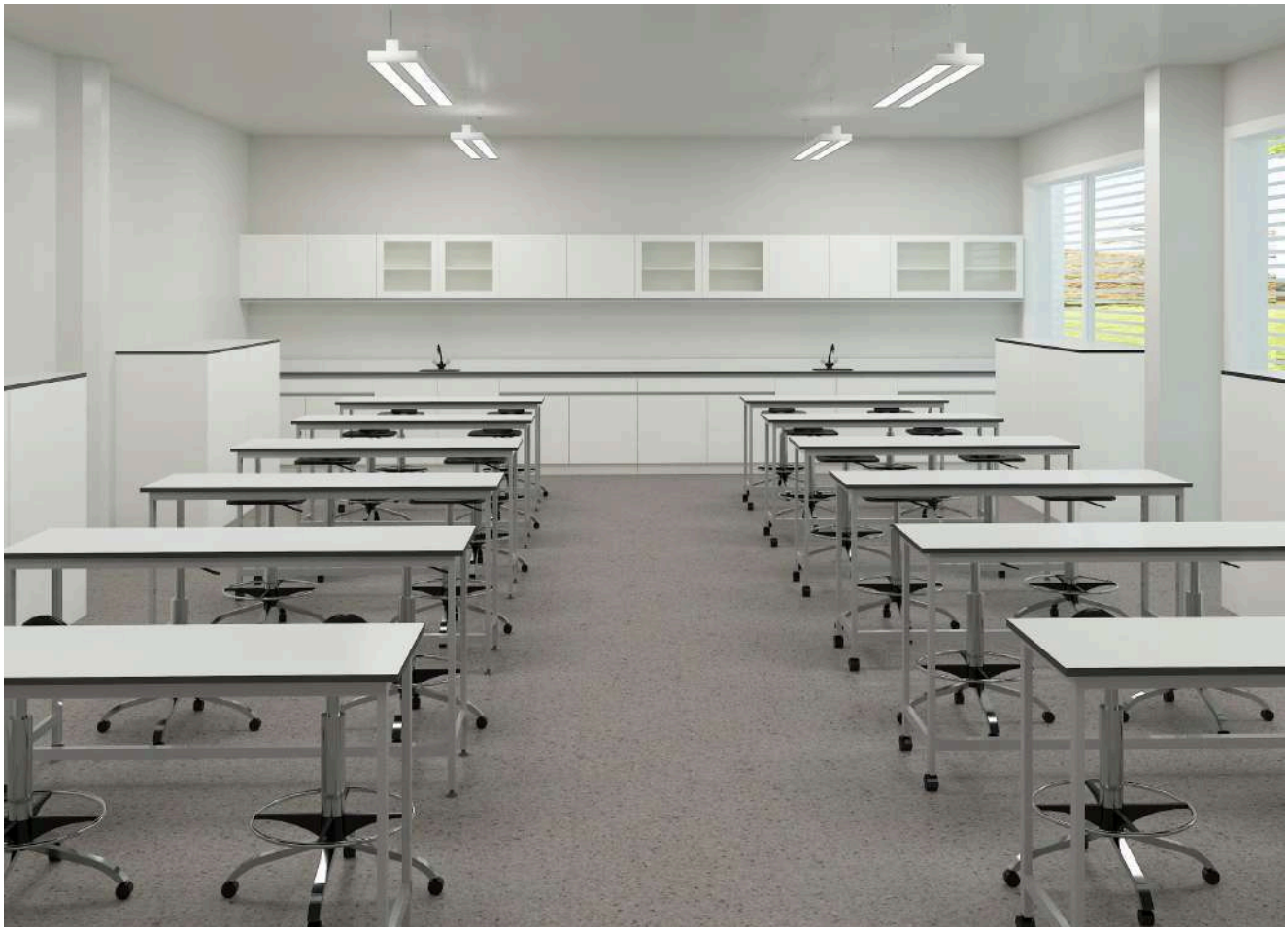

STAINLESS STEEL FURNITURE

We offer the widest variety of custom made Stainless steel furniture like as Cleanroom tables, Pass thru boxes, workstations, work benches, storage cabinets etc.

The easy cleaning ability of steel furniture makes it the first choice for strict hygienic conditions. Stainless steel is basically inert to most of the acids/alkali's released by foods, vegetables, additives etc.. It does not normally get pitted, thus avoiding the worst chance for bacterial infection.

For more information about Stainless Steel Furniture

STAINLESS STEEL FURNITURE

CLEAN ROOM

All are designed and manufactured in specifically for cleanroom use. A wide range of stainless steel furniture from step over benches to workstations and more, suitable for gowning and cleanroom use. All productcs are made of 304-grade stainless steel as standard and 316-grade to suit those requiring a more intense wipe down procedure.

GALLERY INDUSTRIAL LABS

Museums Lab Furniture

Find more pictures here

https://bonlabin.com/gallery/

Perfume Lab

GALLERY INDUSTRIAL LABS

GALLERY

INDUSTRIAL LABS

GALLERY

INDUSTRIAL LABS

GALLERY

INDUSTRIAL LABS

GALLERY

MEDICAL LABS

GALLERY

MEDICAL LABS

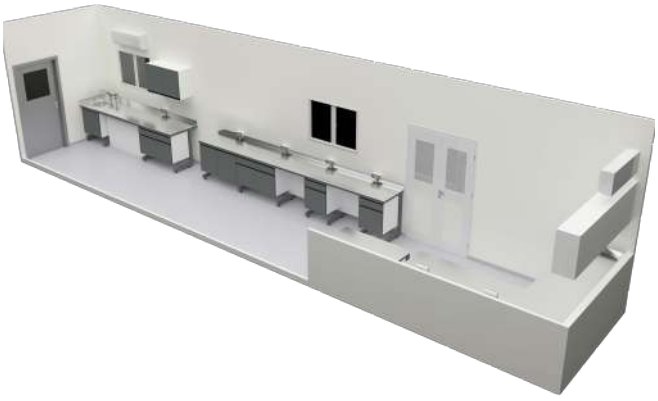

GALLERY

MEDICAL LABS

GALLERY

MEDICAL LABS

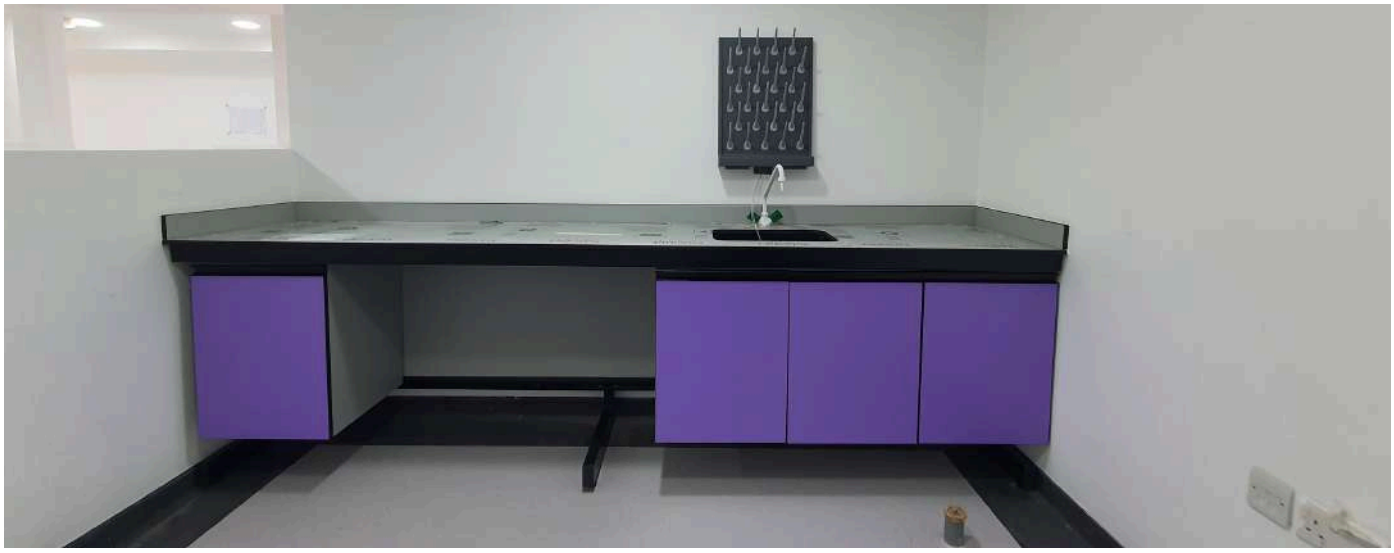

GALLERY

EDUCATIONAL LABS

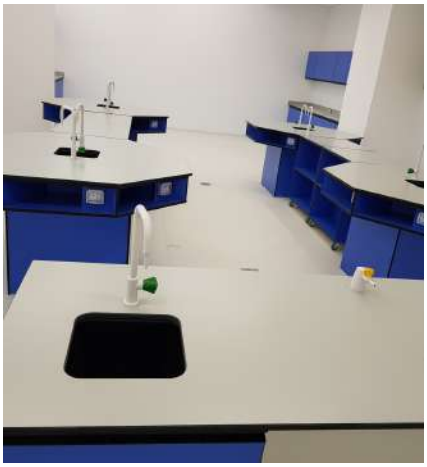

GALLERY

EDUCATIONAL LABS

GALLERY

EDUCATIONAL LABS

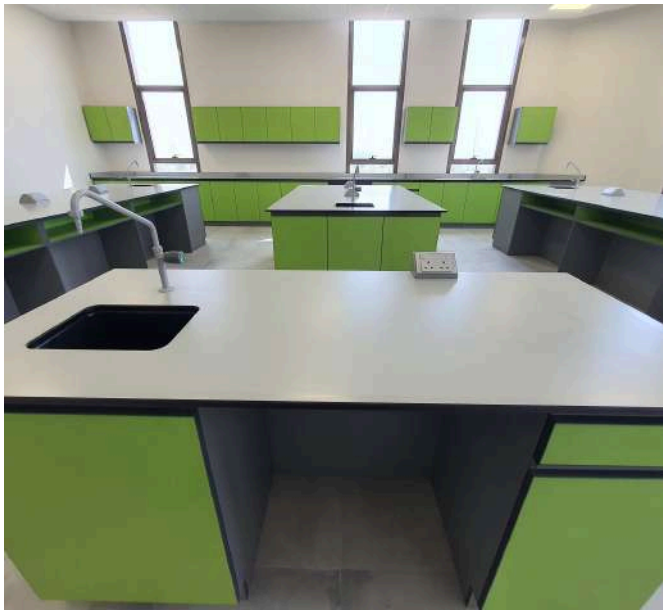

GALLERY

EDUCATIONAL LABS

OUR SERVICES

OUR SERVICES

- Laboratory furniture and service systems
- Fume hoods & Extraction arms
- Ventilation & airflow systems
- Safety storage cabinets flammables
- Emergency eye washes & safety showers
- Fume filtering systems
- Mobile laboratory in vehicles

WE DO DESIGNING AND COMMISSIONING OF TECHNICAL FURNISHING SOLUTIONS

- Educational institutions
- Food industries
- Testing laboratories,
- Research laboratories,
- Treatment plant
- Petroleum laboratories
- Oil laboratories
- Health care & hospital
- Paint laboratories
- Cement industries
- Textiles and garments
- Agricultural laboratories,
- Fisheries laboratories
- Veterinary laboratories
- Computer labs
- Archaeological
- Micro biological
- Film industries,
- Forensic laboratories,
- Container and mobile labs

OUR PARTNERS

Gratnells
FUMEX
BROEN
TRESPA
SEAT VENTILATION
TOF ITALIAN MANUFACTURERS SINCE 1948
TOPAIR CLEAN AIR SOLUTIONS
LSS LABOR SECURITY SYSTEM SAFETYFIRST
STABIL BUILDERS PVT LIMITED
EXPULSER FUME HOOD
érudit ACADEMIA FURNITURE
FUMEFIT
LOCK UP SAFETY STORAGE CABINETS

DISCLAIMER

The plans, images, specifications and other details given in this brochure are only indicative and the developer reserves the right to change any or all of these in the interest of the project or development. This document does not constitute an offer or any contract of any nature whatsoever. Any purchases/ legal agreement or document/s in any project shall be governed by the terms and conditions of the agreement entered into between the parties and no details mentioned in this document shall govern the transaction.

www.bonlabin.com

CONTACT US

Follow us on social media for updates

BON FURNITURE INDUSTRIES LLC

P.O. Box 66902, Emirates Industrial City, SHARJAH – UNITED ARAB EMIRATES
Tel: +971 6 5569188, Mobile: +971 50 6703704, +971 52 6475053, E-mail: sales@bonlabin.com

KINGDOM OF SAUDI ARABIA
Integrated Modern Scientific Supplies LLC
Riyadh-11323, Kingdom of Saudi Arabia
Mobile: +966 11 293 1199
E-mail: sultan@gulfbioanalytical.com

KUWAIT
Burgan Equipment Co
Building No. 6, Floor No. 1, Rooms 1 and 2, Al-Soor Street, Salhiya, Kuwait
Mobile: +96597601637
E-mail: contact@burganequip.com

ETHIOPIA
More Tech
Addis Ababa, Ethiopia
Mobile: +251 988899395
Mobile: +251 911405499
Mobile: +251 116676999
E-mail: tsegaye9@gmail.com
E-mail: sales@labethiopia.com

INDIA
Leifark Industries LLP
Bengaluru Rural, Karnataka, India
Mobile: +91 8904035533
E-mail: contact@bonlabin.com

SULTANATE OF OMAN
Alchemy Arabia LLC
PO.Box 338; PC 130; Darcom Tower, Azaiba South, Muscat - Sultanate of Oman
Mobile: +968 99348696
E-mail: sales@labdesignme.com

UNITED KINGDOM
Coral Laboratories & Chemicals Trading UK LTD
Canary Wharf, London, United Kingdom
Mobile: +44 7436593126
E-mail: coral@corallab.co.uk

Falkland Electricals & Trading Co. W.L.L
Doha, State, Qatar
Mobile: +974 3363 4872
Mobile: +974 44166493
Mobile: +974 44850463
E-mail: gm@falklandprojects.com

KENYA
Nelliwa Builders Ltd
Nairobi, Kenya
Mobile: +254727329627
E-mail: info@morayme.com

Mohammed Fakhroo & Bros. W.L.L
Manama, Bahrain
Mobile: +973 3990 1580
Mobile: +973 17712002
Mobile: +973 17275996
E-mail: sales@mylabfurniture.com

CÔTE D'IVOIRE
Global mesurex africa
Port bouet,quartier amamou,
12 bpm 1 abidjan 12,
E-mail - sales@labgci.com
Phone - +2250799602661

BONLAB
LABORATORY FURNITURE +